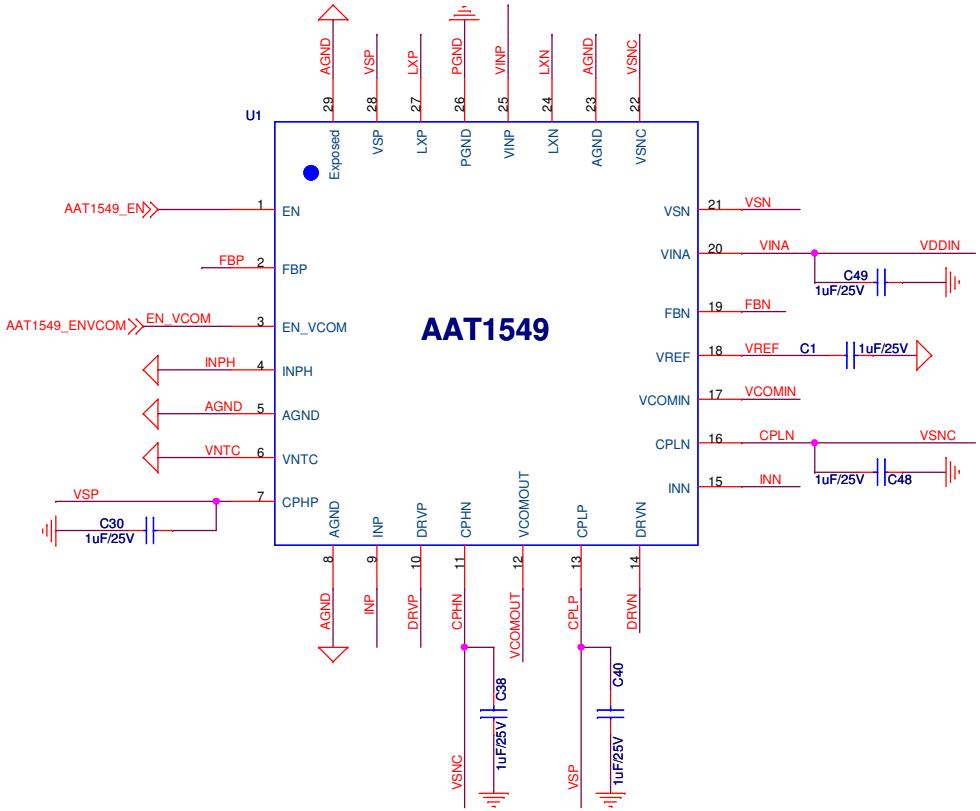
U1
AAT1549
Exposed
AGND
VSP
LXP
PGND
VINP
LXN
AGND
VSNC
AAT1549_EN
EN
FBP
EN_VCOM
AAT1549_ENVCOM
INPH
AGND
VNTC
VSP
CPHP
C30
1uF/25V
VSN
VINA
FBN
VREF
VCOMIN
CPLN
INN
C49
1uF/25V
C1
1uF/25V
C48
1uF/25V
AGND
INP
DRVP
CPHN
VCOMOUT
CPLP
DRVN
C38
1uF/25V
C40
1uF/25V

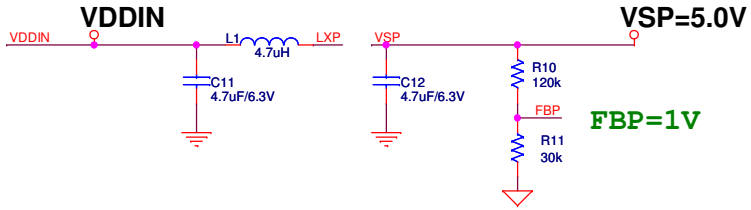
VDDIN
VDDIN
L1
4.7uH
LXP
C11
4.7uF/6.3V
VSP
VSP=5.0V
C12
4.7uF/6.3V
R10
120k
FBP
FBP=1V
R11
30k

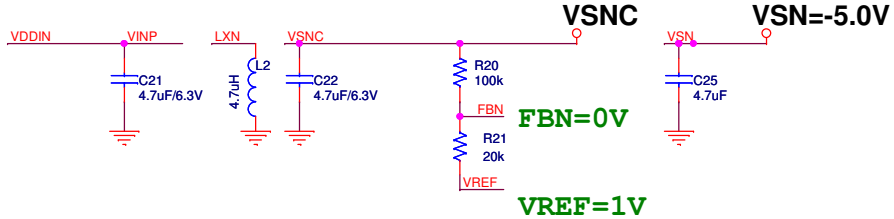
VDDIN
VINP
C21
4.7uF/6.3V
LXN
L2
4.7uH
VSNC
C22
4.7uF/6.3V
VSNC
R20
100k
FBN
FBN=0V
R21
20k
VREF
VREF=1V
VSN
VSN=-5.0V
C25
4.7uF

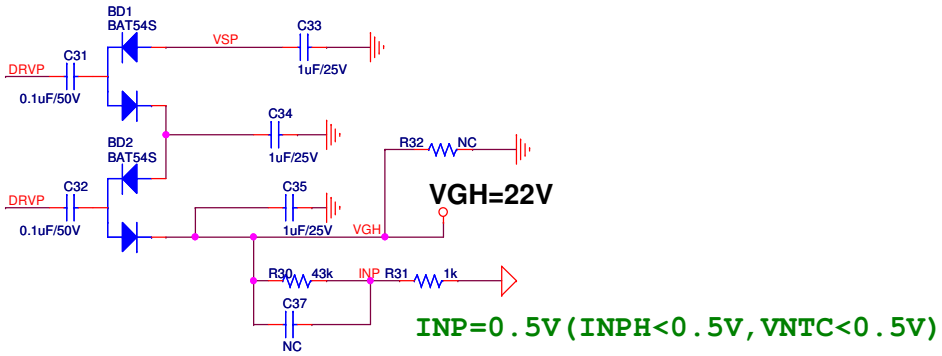
BD1
BAT54S
VSP
C33
1uF/25V
DRVP
C31
0.1uF/50V
C34
1uF/25V
BD2
BAT54S
R32
NC
DRVP
C32
0.1uF/50V
C35
1uF/25V
VGH
VGH=22V
R30
43k
INP
R31
1k
C37
NC
INP=0.5V(INPH<0.5V,VNTC<0.5V)

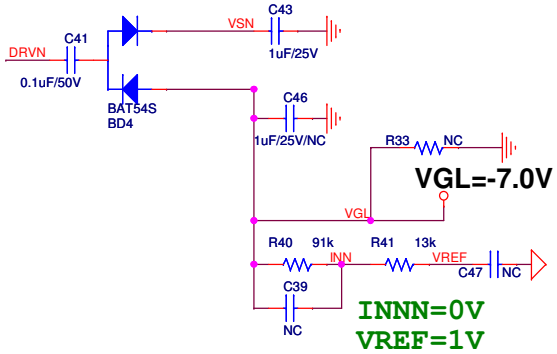
DRVN
C41
0.1uF/50V
VSN
C43
1uF/25V
BAT54S
BD4
C46
1uF/25V/NC
R33
NC
VGL
VGL=-7.0V
R40
91k
INN
R41
13k
VREF
C47
NC
C39
NC
INNN=0V
VREF=1V

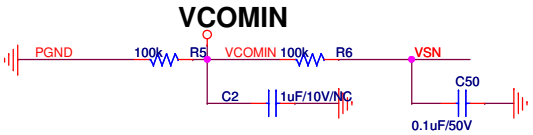
VCOMIN
PGND
100k
R5
VCOMIN
100k
R6
VSN
C2
1uF/10V/NC
C50
0.1uF/50V

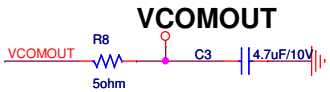
VCOMOUT
VCOMOUT
R8
5ohm
C3
4.7uF/10V